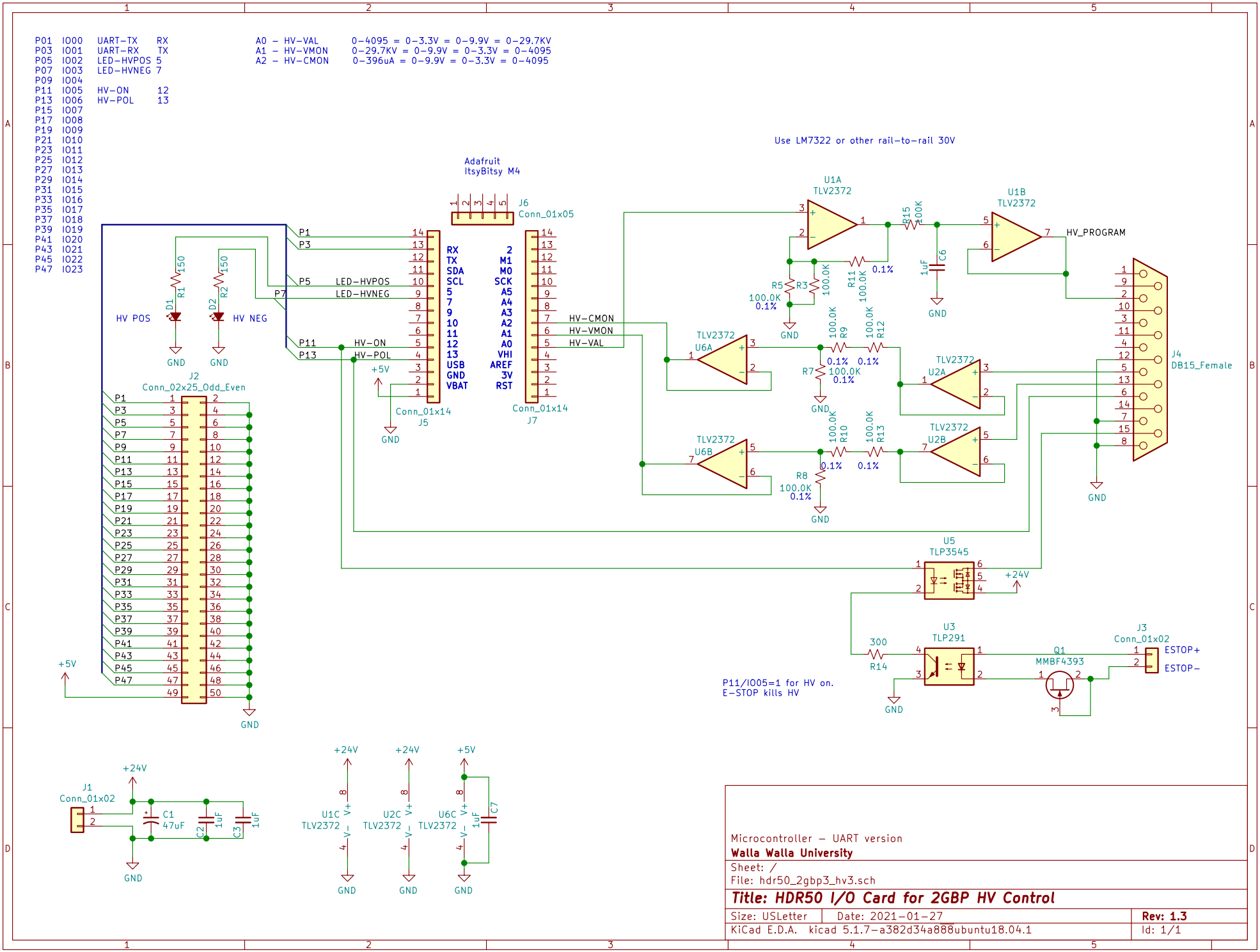

Microcontroller - UART version

Walla Walla University

Sheet: /

File: hdr50_2gbp3_hv3.sch

Title: HDR50 I/O Card for 2GBP HV Control

Size: USLetter	Date: 2021-01-27	**Rev: 1.3**
KiCad E.D.A. kicad 5.1.7-a382d34a888ubuntu18.04.1		Id: 1/1